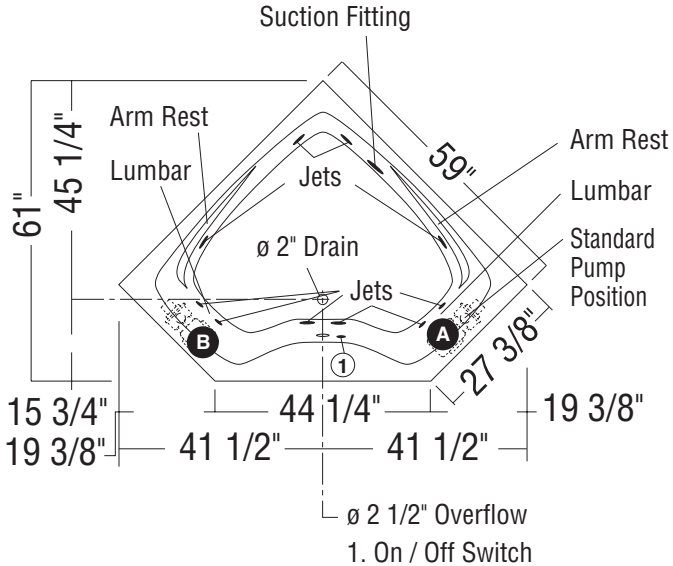

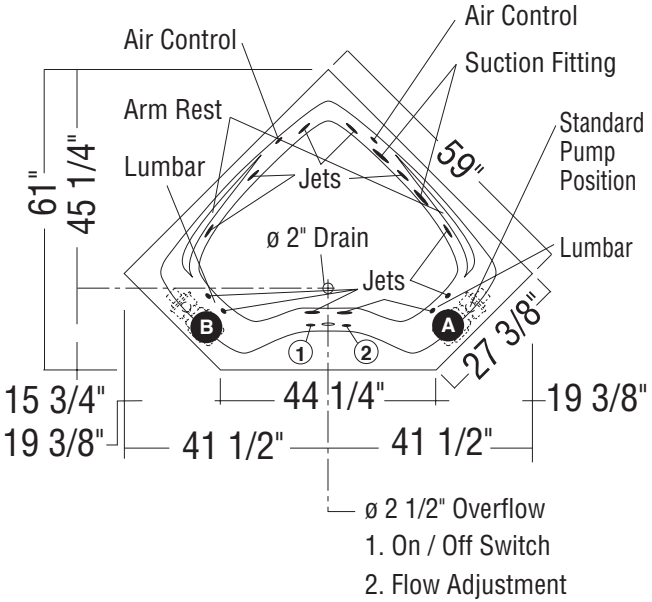

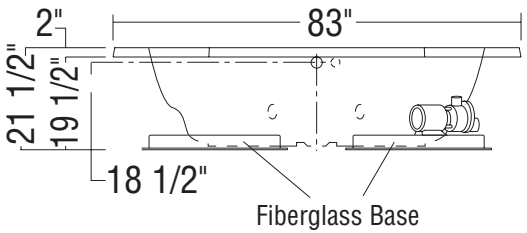

10-jet Homestead Collection CT2-6060
BWS (illustrated)

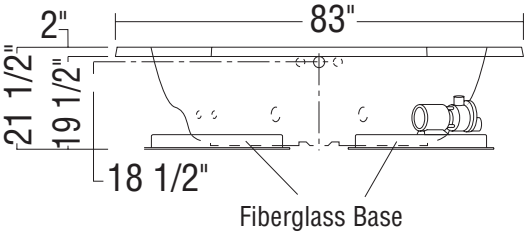

12-jet Bodywrap System CT2-6060
BWS (illustrated)

All dimensions are approximate. Structure measurements must be verified against the unit to ensure proper fit.