California Faucets®

Descanso®

SINGLE HOLE LAV / VESSEL / BAR FAUCET

3001-2
3001K-2
3001F-2

Features
- *Over 28 finishes including 13 PVD finishes*
- *All brass construction*
- *4-5/8" spout center to center*
- *Single handle operation cartridge with ceramic disc*
- *Flexible braided hoses for ease of installation*
- *Flush mount aerator insert*
- *1.2 gpm (4.5 L/min) max flow rate*

Codes/Standards
Product meets or exceeds the following:
- *ASME A112.18.1/CSA B125.1*
- *NSF/ANSI 61 & NSF/ANSI 372*
- *CEC & DOE*
- *Commonwealth of MA*
- *EPA WaterSense High Efficiency Lavatory*
- *ADA compliant*

3001K-2

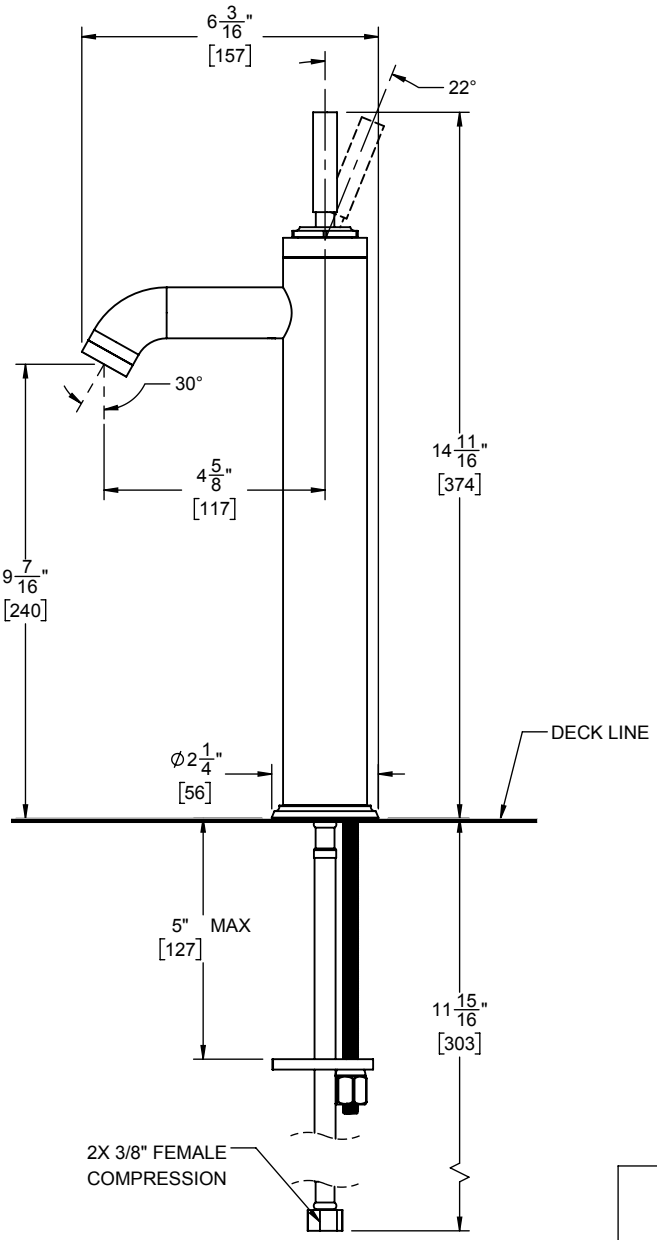

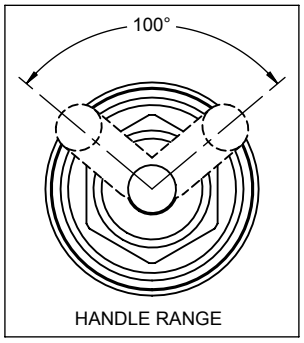

THROUGH-HOLE SPECIFICATIONS		
MIN	RECOMENDED	MAX
SPOUT: ∅1-1/4" [32]	∅1-3/8" [35]	∅1-1/2" [38]

DIMENSIONS SHOWN TO NEAREST 1/16"
[DIMENSIONS SHOWN TO NEAREST 1mm]

SPECIFICATIONS SUBJECT TO CHANGE WITHOUT NOTICE