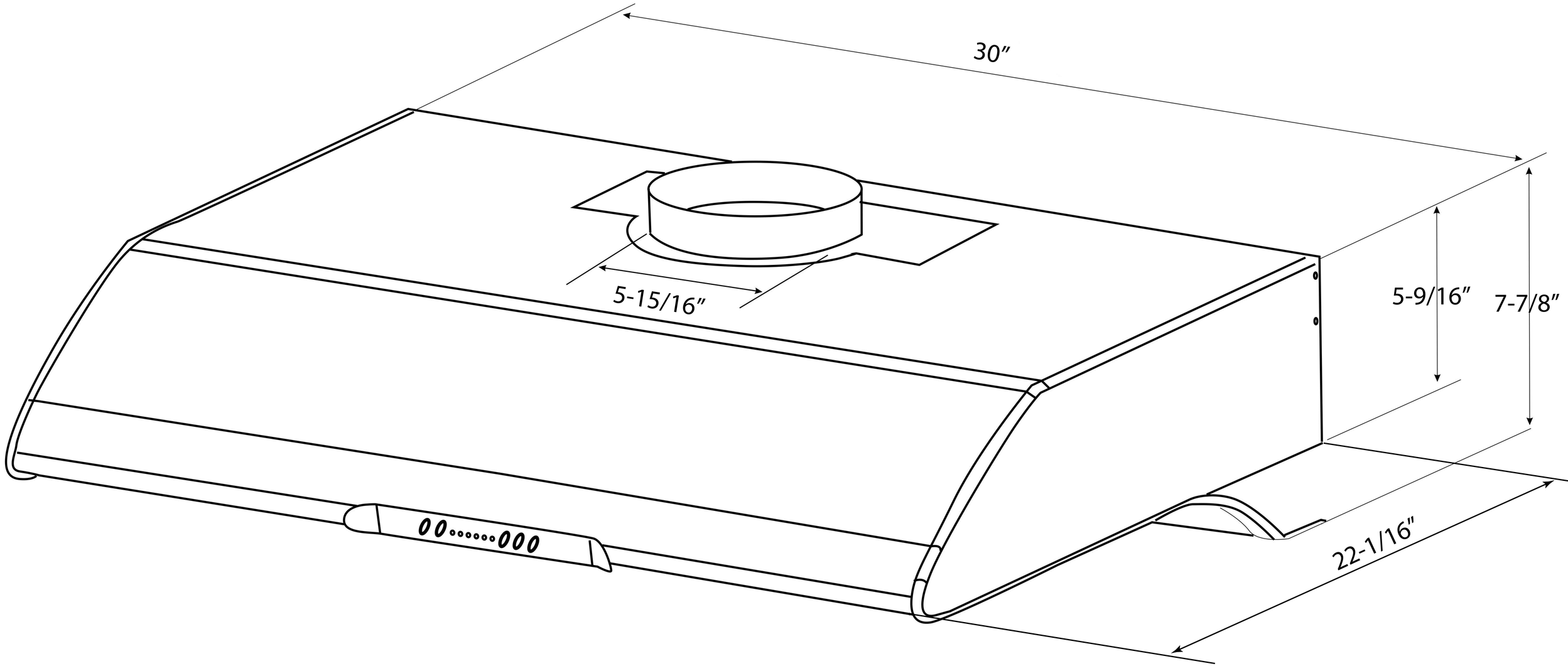
30″
5-15/16″
5-9/16″
7-7/8″
22-1/16″