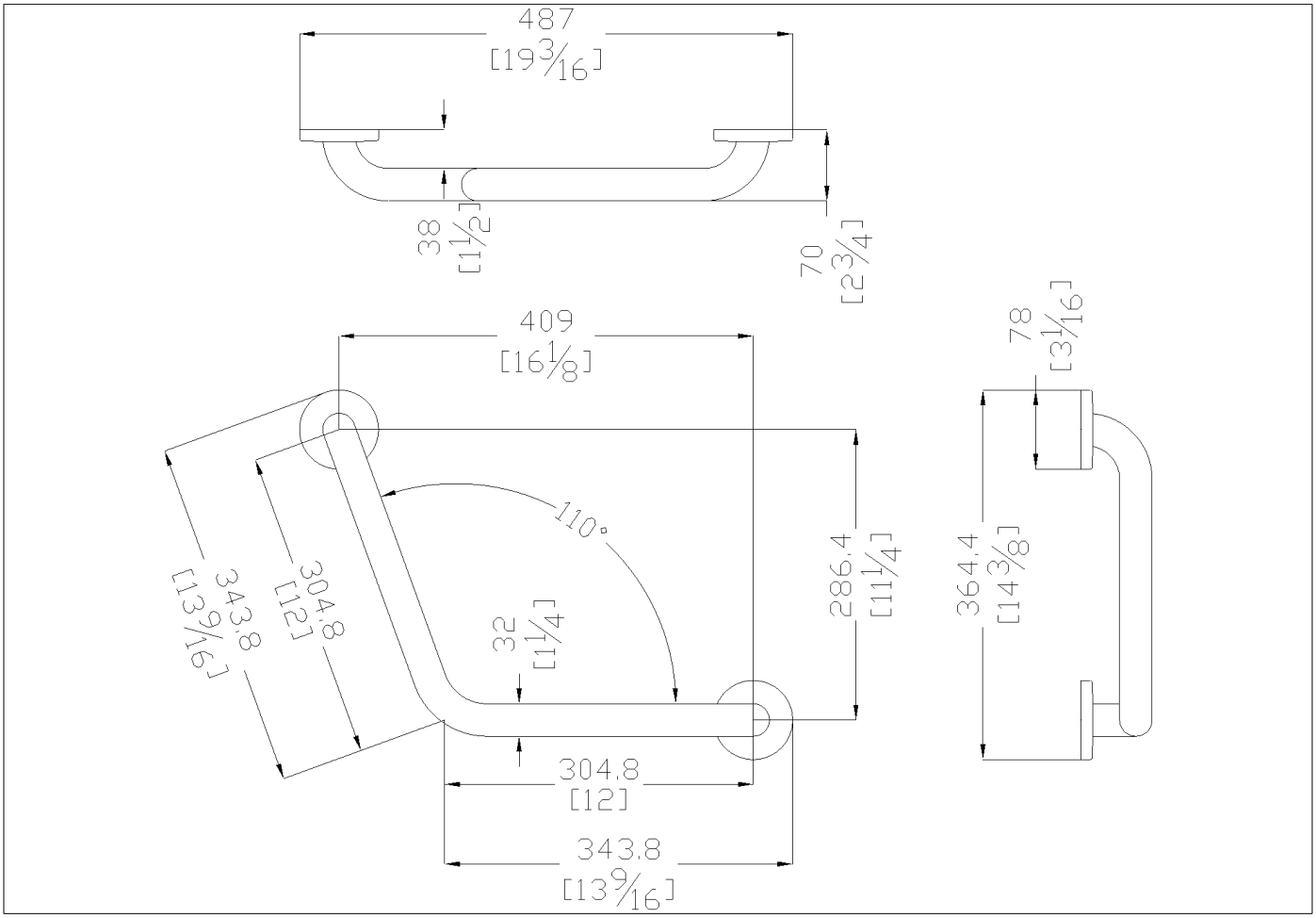

12”x12” angled grab bar. 1.25” diameter, 1.2mm wall thickness, 304 stainless steel.

Code **G55JAS15** *Series* **Stainless Steel**

Net weight lb.	1,90	Dimensions [WxDxH] In.	19 3/16x2 3/4x14 3/8
In use weight capacity	*Vertical lb.*	331,00	

Use and installation info

Use Wall installation

Cleaning

Clean using pure water and home disinfectants which have been sufficiently diluted in water. Do not use abrasive detergents and trichloroethylene, oxygenated water or acetone-based solvents.

Fasteners Included with the product

Packaging information

Type of package Cardboard packaging

Dimensions [WxDxH] In. 23 5/8x5 11/16x4 5/16 *Weight lb.* 2,58

Available colours

N1 Satin

All herein data are subject to continuous technical updating. The manufacturer reserves the right to make change and improvements to the product herein described without any previous notice.

© Ponte Giulio S.p.A. all rights reserved